PRODUCT SPECIFICATION

Product PN	10498763, 10498764	Mod. 984
Description	3 or 6 Place Vacuum Manifolds	Rev. 02

3 or 6 Place Vacuum Manifolds

PRODUCT DESCRIPTION

3 or 6 place vacuum manifolds used in processing microbiological samples

Membrane	Material	Color	Packaging	Item Number
3 Place Vacuum Manifold	Stainless Steel	Silver	1/box	10498763
6 Place Vacuum Manifold	Stainless Steel	Silver	1/box	10498764

MANUFACTURER NAME

GVS North America
63 Community Drive
Sanford, Me 04073
Phone: +1.866.736.1250
eMail: CustomerCareGVSLS@gvs.com - Website: www.gvs.com

INTENDED USE / APPLICATION

Applications

- Potable Water Analysis
- Beer and Wine Analysis
- Waste Water Analysis
- Dairy Product Analysis
- Soft Drinks Analysis

MATERIALS

Frame: Stainless Steel

Color: Silver

PRODUCT CHARACTERISTIC

Item	Description	Required for 6 Place	Required for 3 Place
1	Tube – 1 inch Dia 316 Stainless Steel Round Bar x 28.75 inches long	1	
1a	Tube – 1 inch Dia 316 Stainless Steel Round Bar x 14.50 inches long		1
2	End Plate – ½ inch x 4 inch 316 Stainless Steel Plate x 4.5 inches long	2	2
3	Vacuum Cup – 1 ¾ inch 316 Stainless Steel Round Bar x 3.4 inches long	6	3
4	¼ inch NPT 316 Stainless Steel Quick Turn Plug Valve	6	3
5	¼ inch NPT 316 Stainless Steel Push on Hose Barb, ¼ inch ID Hose	1	1
6	¼ inch NPT Stainless Steel Pipe Plug	1	1
7	¼ inch 20 Flat Point Steel Socket Head Screw Set x ½ inch long	2	2

PRODUCT SPECIFICATION

Product PN	10498763, 10498764	Mod. 984
Description	3 or 6 Place Vacuum Manifolds	Rev. 02

STERILIZATION	☐EtO ☐Gamma ☐Beta ☐Steam ☐e-beam ☒Not Required
PACKAGING AND LABELLING	**Where applicable attach images.** **Packaging: Primary, applied to each manifold** **Secondary, applied to outer box**

PRODUCT SPECIFICATION

Product PN	10498763, 10498764	Mod. 984
Description	3 or 6 Place Vacuum Manifolds	Rev. 02

DRAWING

Dimensions in Inches (Centimeters)

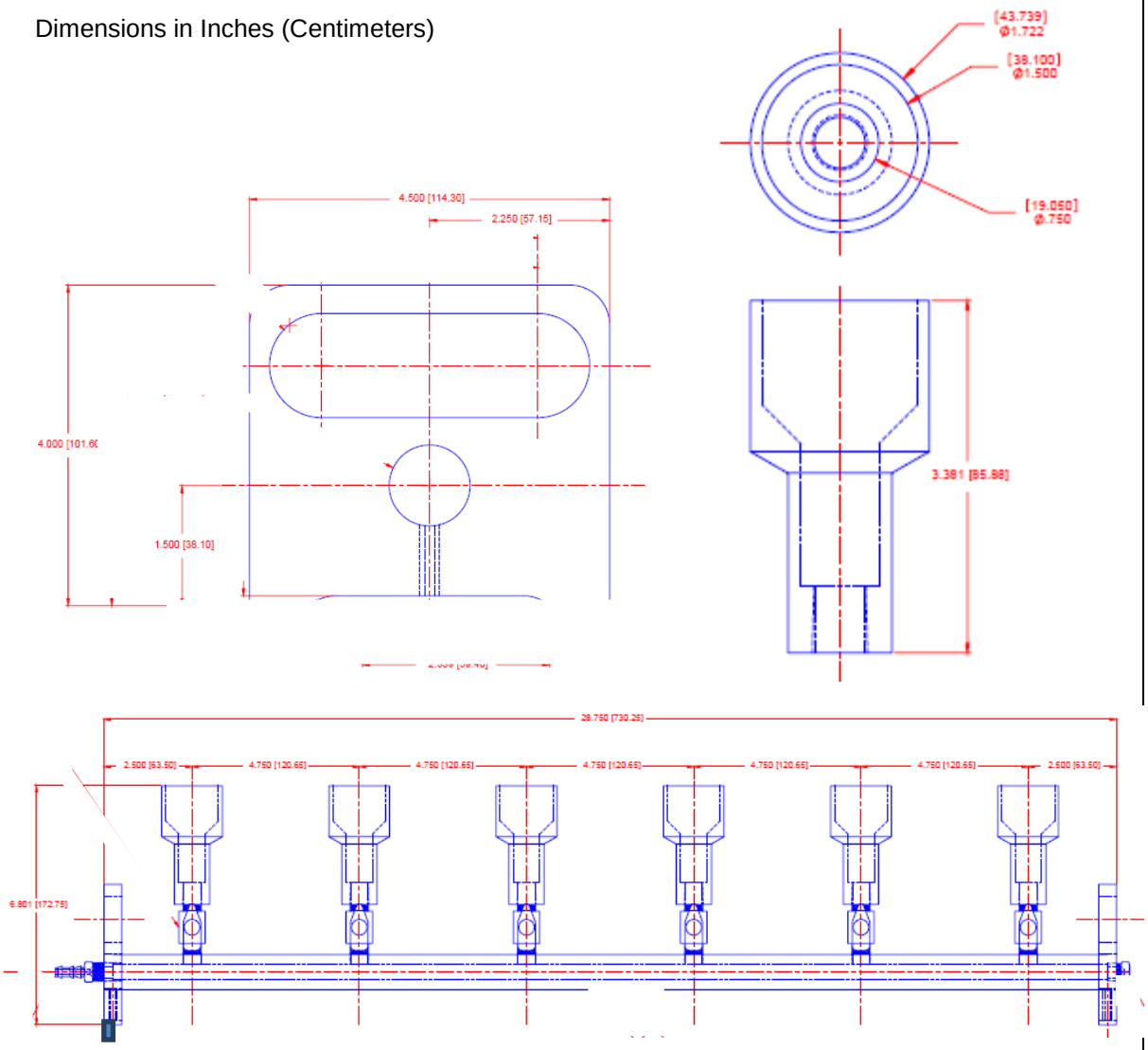

Note: 6 place vacuum manifold shown here. Dimension to the end of the 3 place vacuum manifold is 14.5000 (368.30) to end of tube

PRODUCT SPECIFICATION

Product PN	**10498763, 10498764**	**Mod. 984**
Description	**3 or 6 Place Vacuum Manifolds**	**Rev. 02**

VISUAL REQUIREMENTS

Visual acceptance requirements apply when inspected under below conditions:

Magnification: None
Light type: Normal

	Acceptance Requirement	Sampling Plan
1	Ends of manifold sub-assembly are squarely and securely attached	100% Inspection
2	Manifold sits squarely on bench and is not misaligned	
3	Predrilled holes for each station are aligned and are facing vertically along center of manifold	
4	Valve adapters are squarely placed and securely tightened	
5	Filter heads are vertical and are securely tightened	
6	2-way valves are firmly attached	
7	Valves move between the open and closed positions smoothly	
8	Hex head plug, hose barb and valve adapters are chrome plated	
9	All parts are free of grease and fingerprints	

This material specification describes the properties of product above indicated.
This document contains general requirements, material description, drawing references, defect specification, biological material requirements.

PRODUCT SPECIFICATION

Product PN	**10498763, 10498764**	**Mod. 984**
Description	**3 or 6 Place Vacuum Manifolds**	**Rev. 02**

REVISIONS AND APPROVALS:

DATE	REV.	*REASON FOR CHANGE*	ISSUED AND CONTROLLED BY: (name /function and signature)	APPROVED BY: (name /function and signature)
March 16, 2017	0	Initial Release	Joe DeSisto, Director, Process Engineering	Kevin Wrigley, Director, Quality

CustomerApproval:

We accept this material specification as a part of the agreed terms of delivery

Company name _____

Approved by: _____

(Name, Function) (Signature)

Date _____ _____

(Company stamp)

Please send back this document signed for approval. If we will not receive this specification signed , we consider the first order placed as implicit approval.